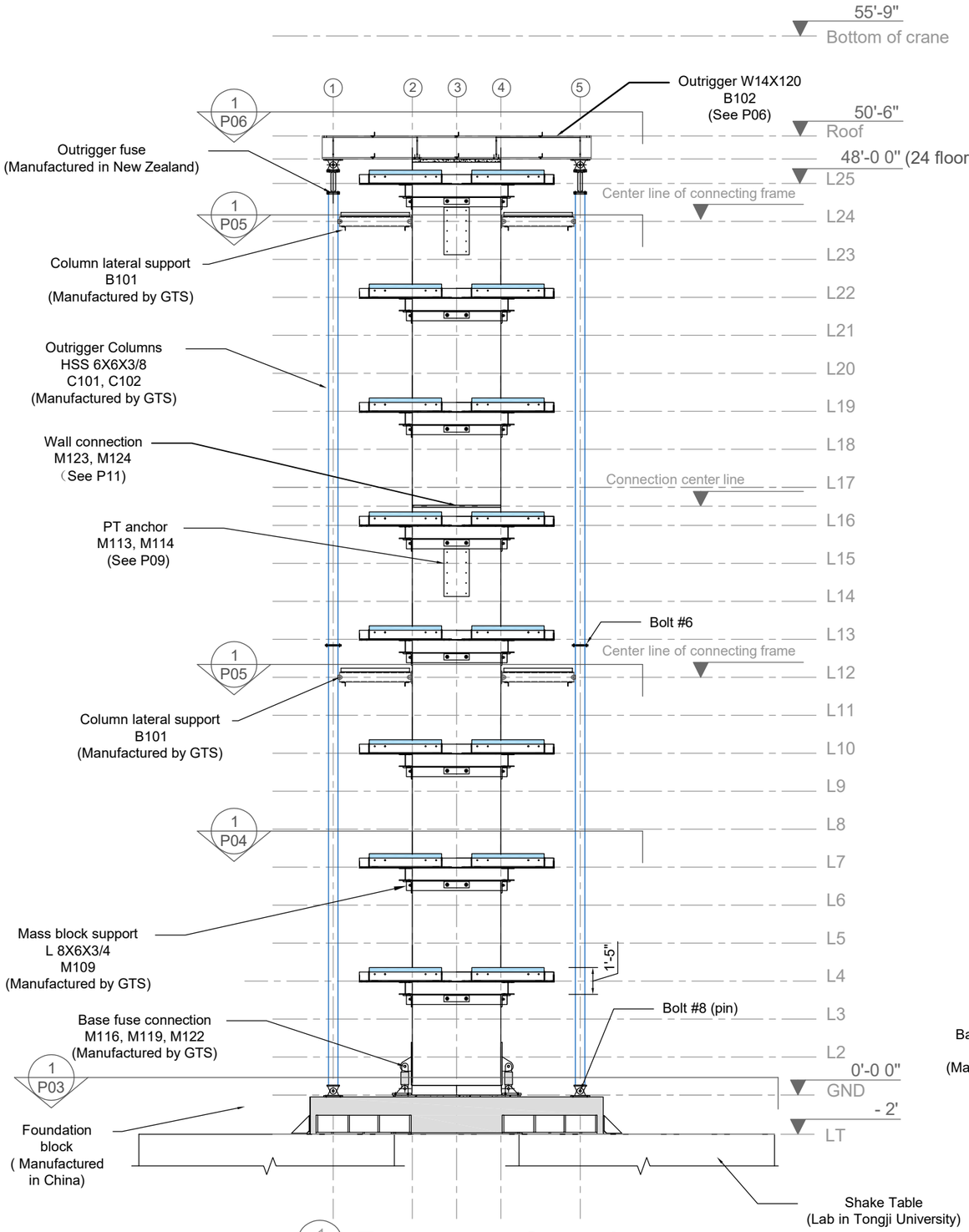

1 P02 **Test set-up: front view**

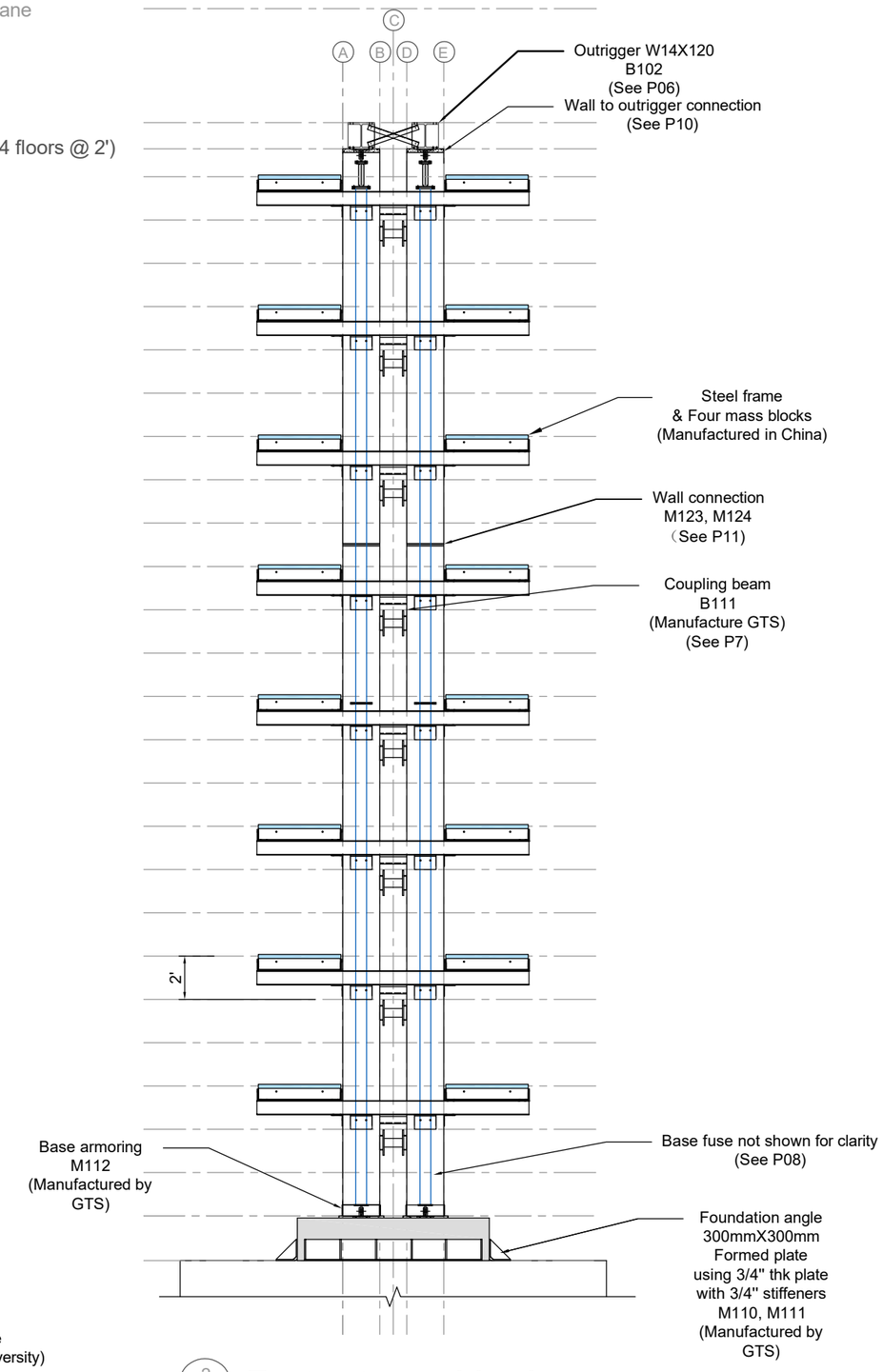

2 P02 **Test set-up: side view**

THE UNIVERSITY OF BRITISH COLUMBIA
Smart Structures

ILEE-EERF COLLABORATIVE SHAKE-TABLE TEST
NEXT-GENERATION EARTHQUAKE RESILIENT TALL BUILDING

Front View And Side View

SHEET NO.
P02

DRAWN BY
Tianyang Qiao
Hengchao Xu
Lisa Tobber

DATE	2020/02/17

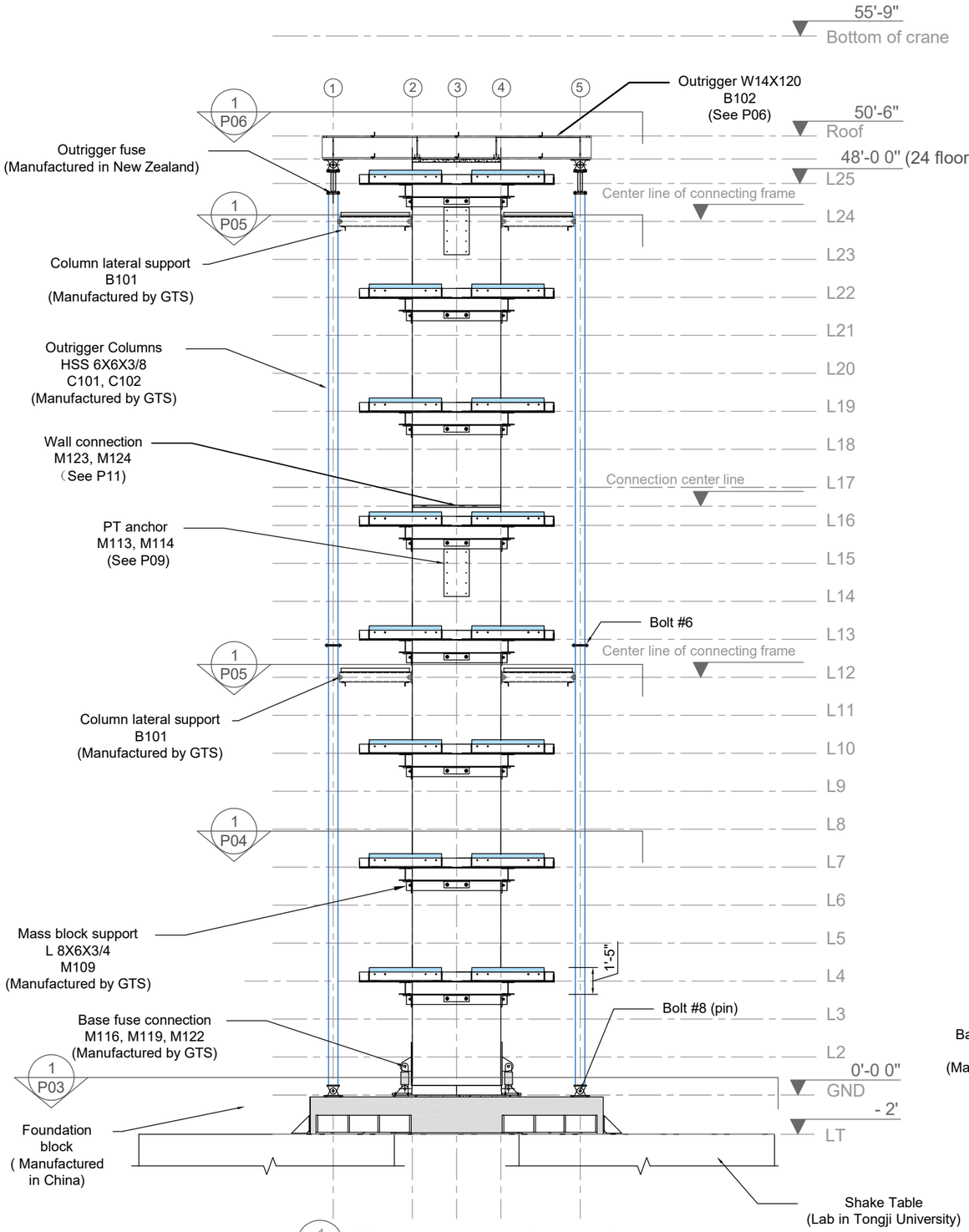

1 P02 **Test set-up: front view**

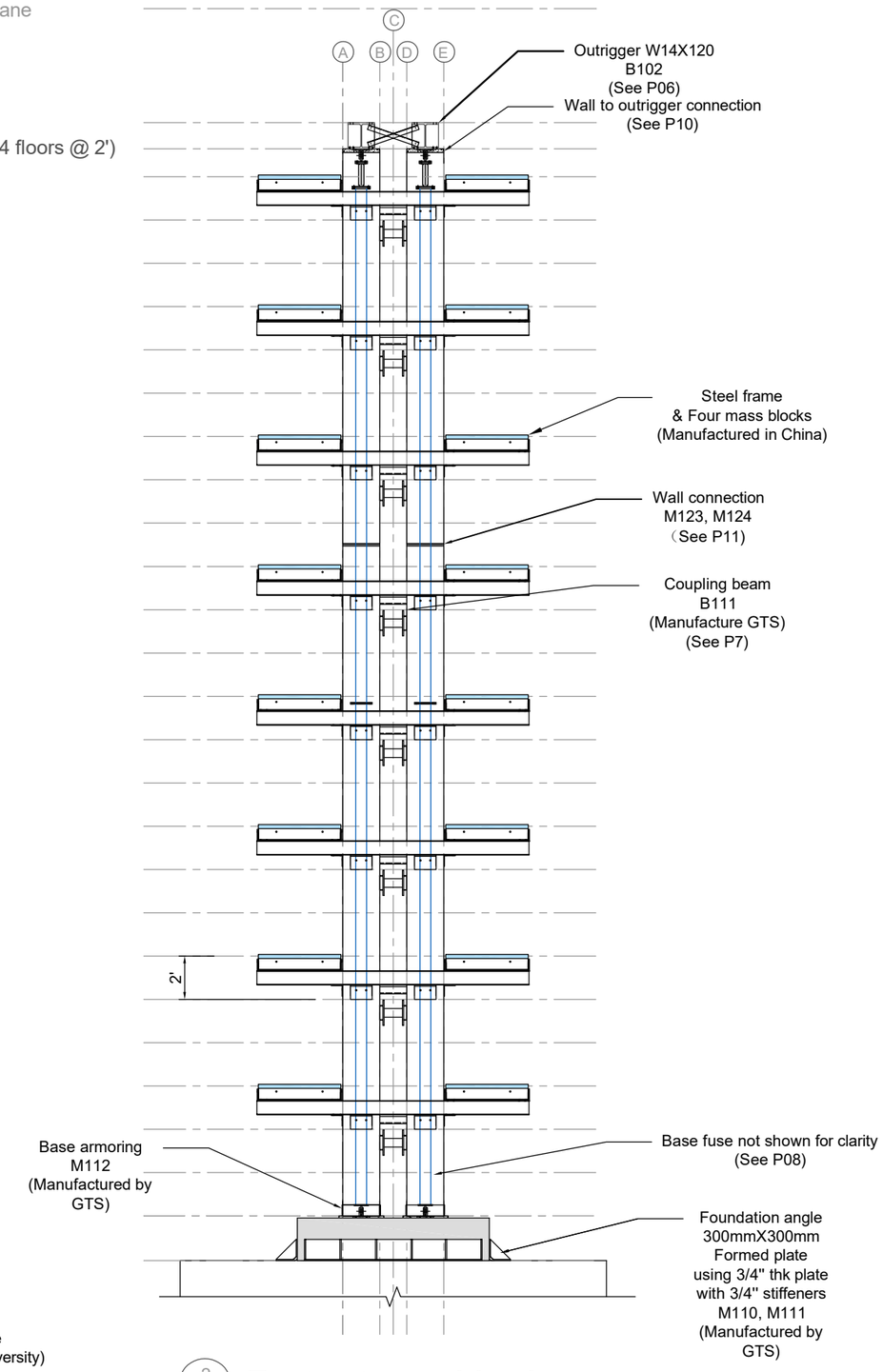

2 P02 **Test set-up: side view**

THE UNIVERSITY OF BRITISH COLUMBIA
Smart Structures

ILEE-EERF COLLABORATIVE SHAKE-TABLE TEST
NEXT-GENERATION EARTHQUAKE RESILIENT TALL BUILDING

Front View And Side View

SHEET NO.
P02

DRAWN BY
Tianyang Qiao
Hengchao Xu
Lisa Tobber

DATE	2020/02/17

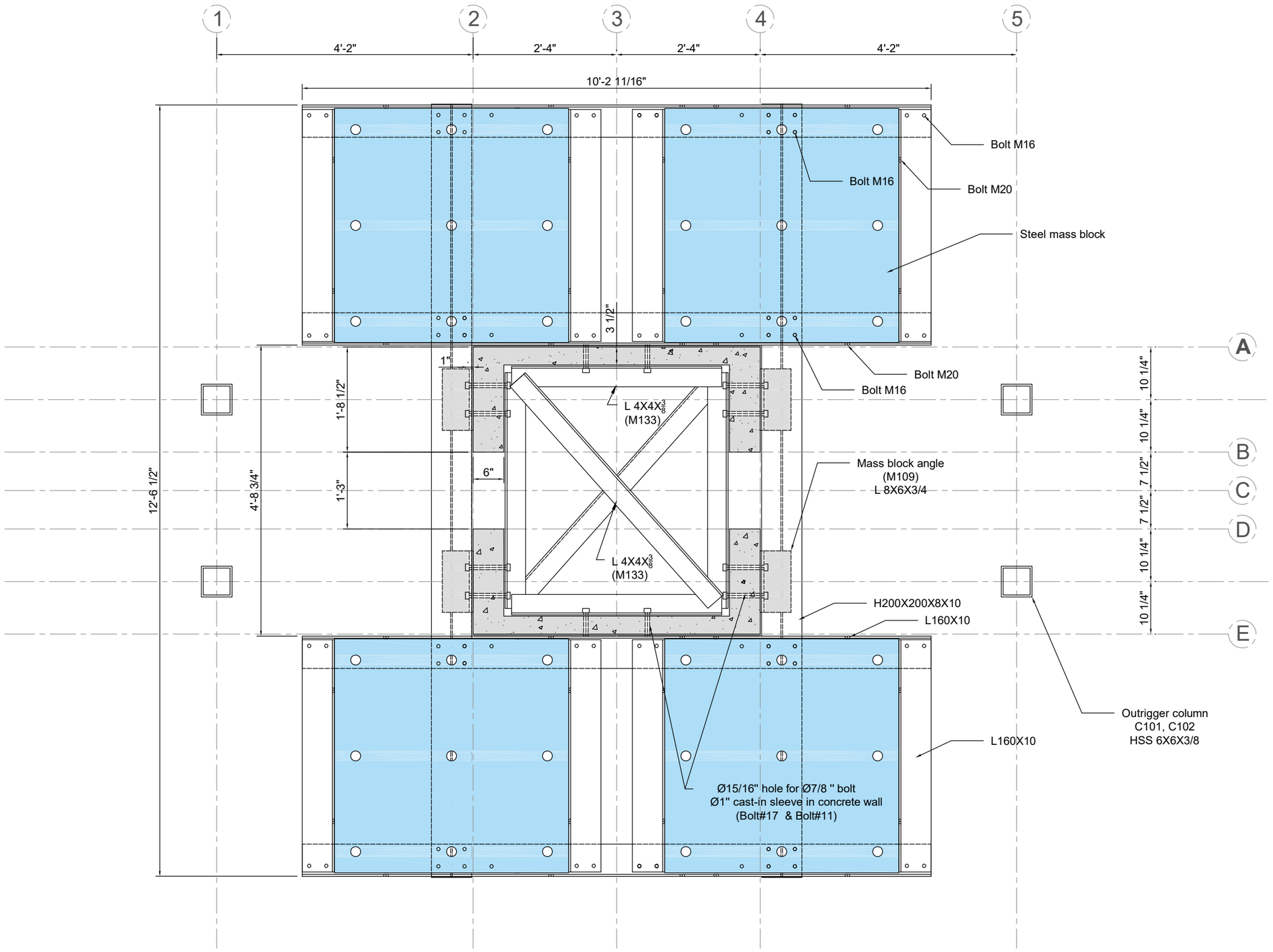

THE UNIVERSITY OF BRITISH COLUMBIA
Smart Structures

ILEE-EERF COLLABORATIVE SHAKE-TABLE TEST
NEXT-GENERATION EARTHQUAKE RESILIENT TALL BUILDING

PlanView (typical floor)

SHEET NO.

P04

DRAWN BY

Tianyang Qiao
Hengchao Xu
Lisa Tobber

DATE	2020/02/17

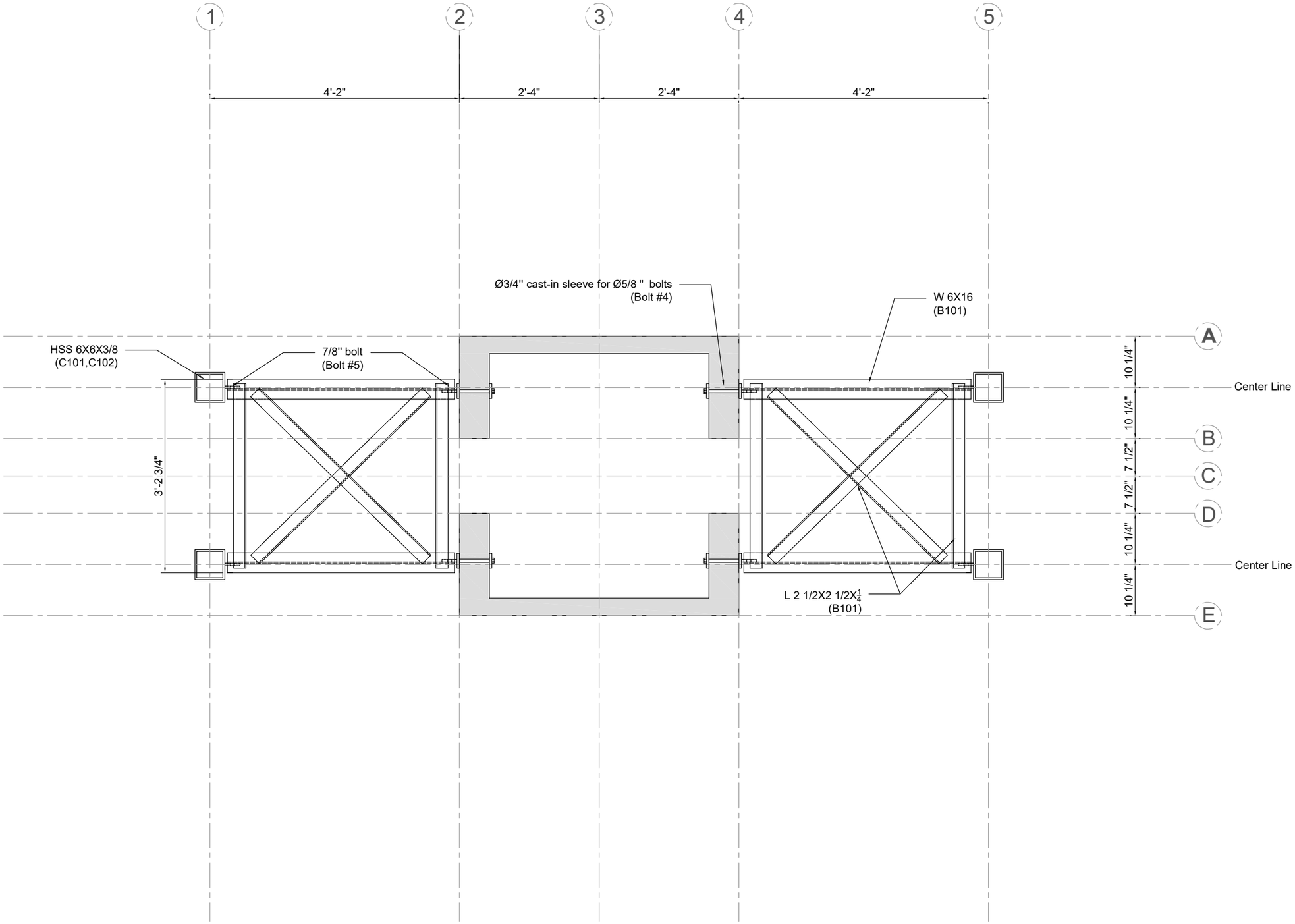

Note for elevation of lateral support:
240" (L11) & 552" (L24)

THE UNIVERSITY OF BRITISH COLUMBIA
Smart Structures

ILEE-EERF COLLABORATIVE SHAKE-TABLE TEST
NEXT-GENERATION EARTHQUAKE RESILIENT TALL BUILDING

PlanView (Lateral Support Level)

SHEET NO.
P05

DRAWN BY
Tianyang Qiao
Hengchao Xu
Lisa Tobber

DATE	2020/02/17

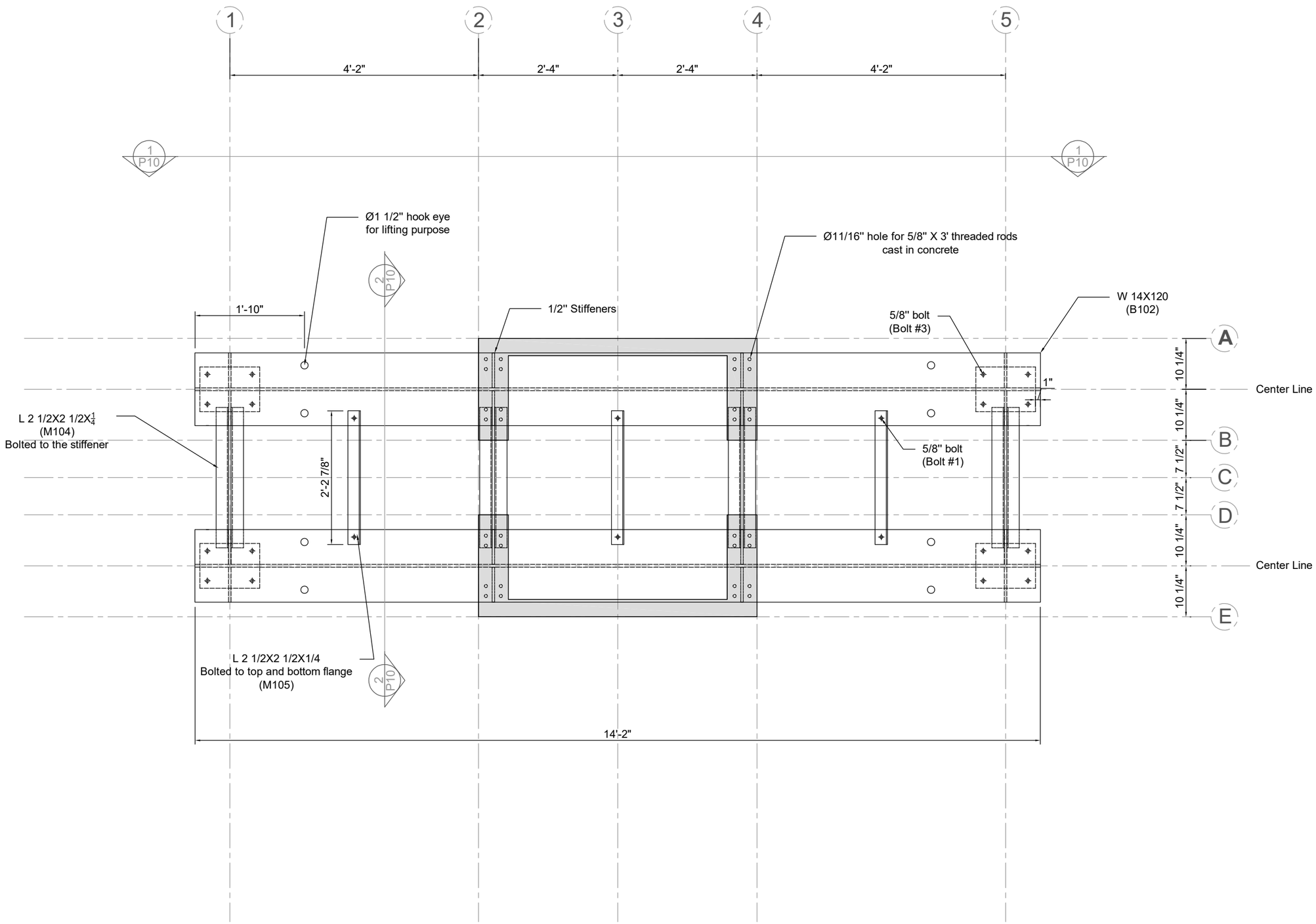

THE UNIVERSITY OF BRITISH COLUMBIA
Smart Structures

ILEE-EERF COLLABORATIVE SHAKE-TABLE TEST
NEXT-GENERATION EARTHQUAKE RESILIENT TALL BUILDING

PlanView(RoofBeam)

SHEET NO.

P06

DRAWN BY

Tianyang Qiao
Hengchao Xu
Lisa Tobber

DATE	2020/02/17

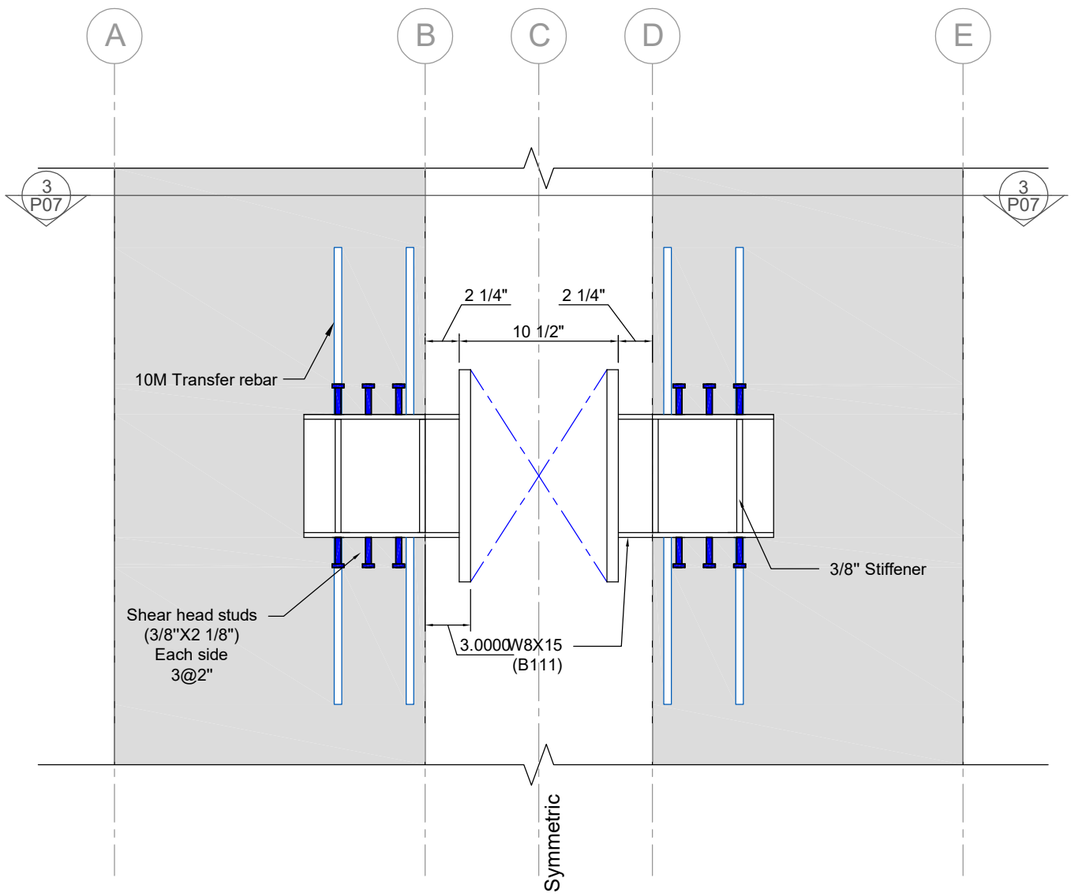

1 P07 B111

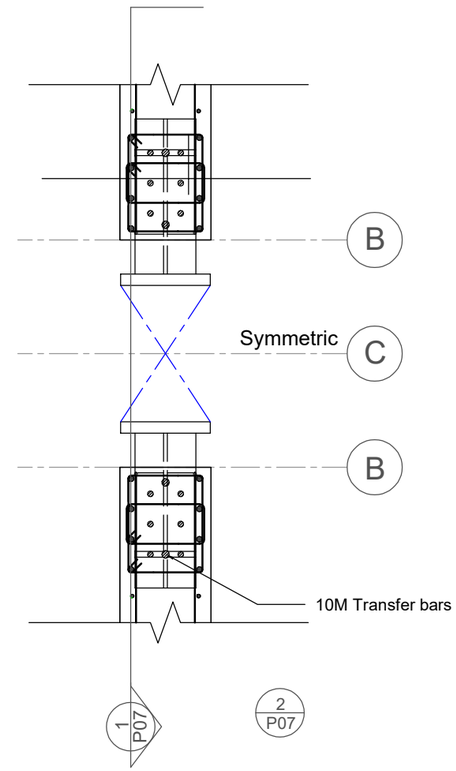

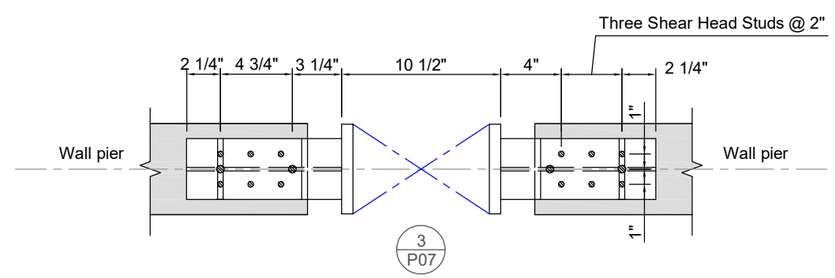

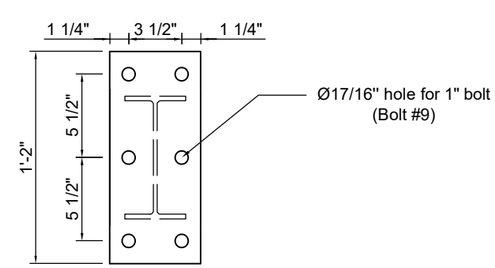

4 P07 End plate, thk 3/4"

THE UNIVERSITY OF BRITISH COLUMBIA
Smart Structures

ILEE-EERF COLLABORATIVE SHAKE-TABLE TEST
NEXT-GENERATION EARTHQUAKE RESILIENT TALL BUILDING

Coupling Beam Detail

SHEET NO.
P07

DRAWN BY
Tianyang Qiao
Hengchao Xu
Lisa Tobber

DATE	2020/02/17

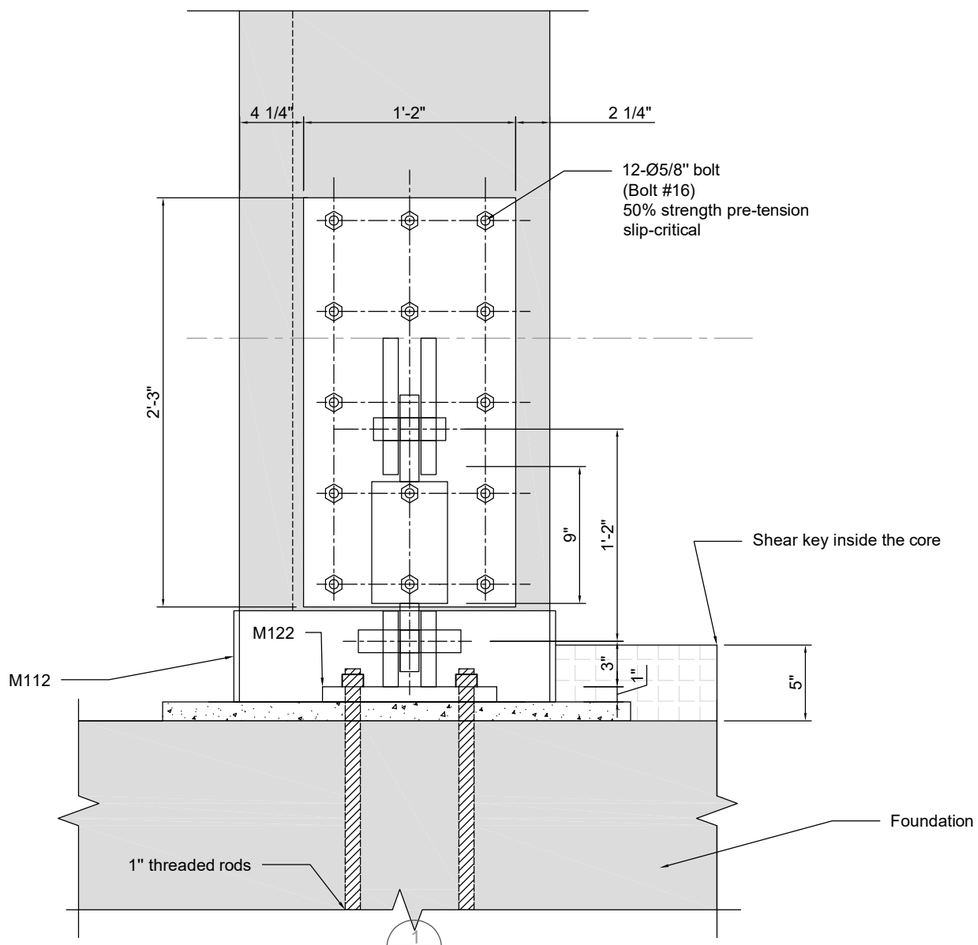

1
P08

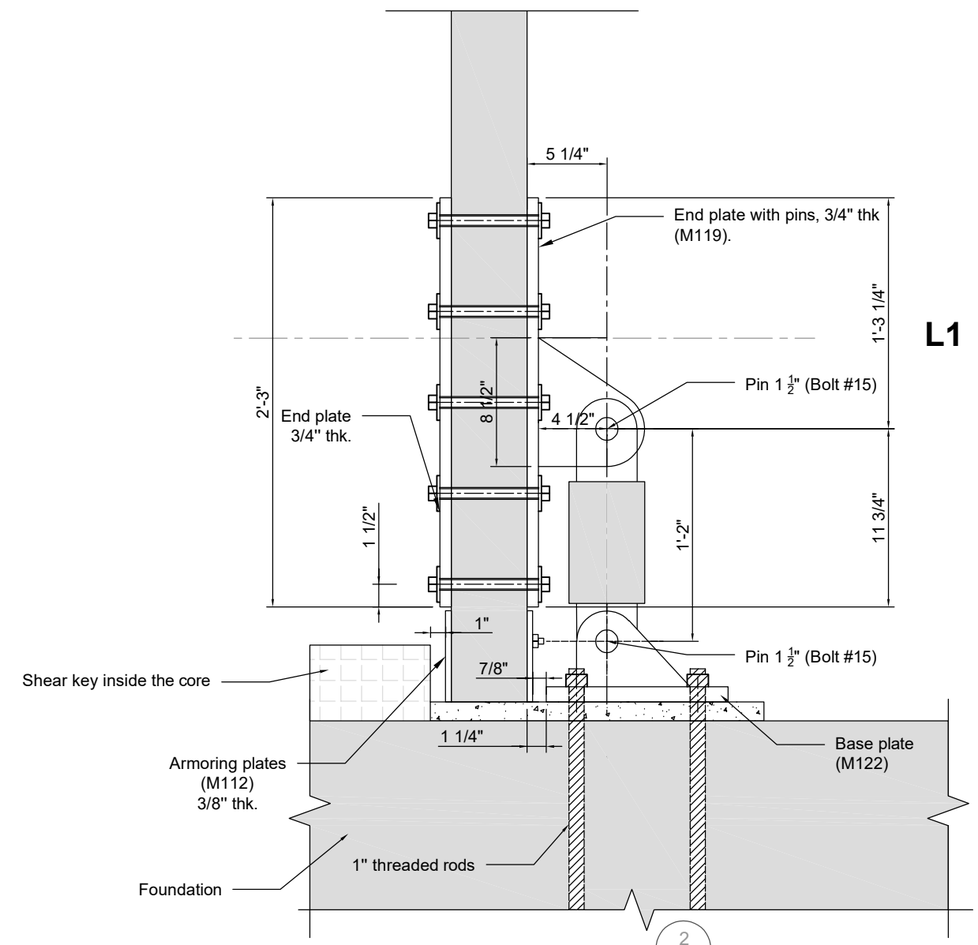

2
P08

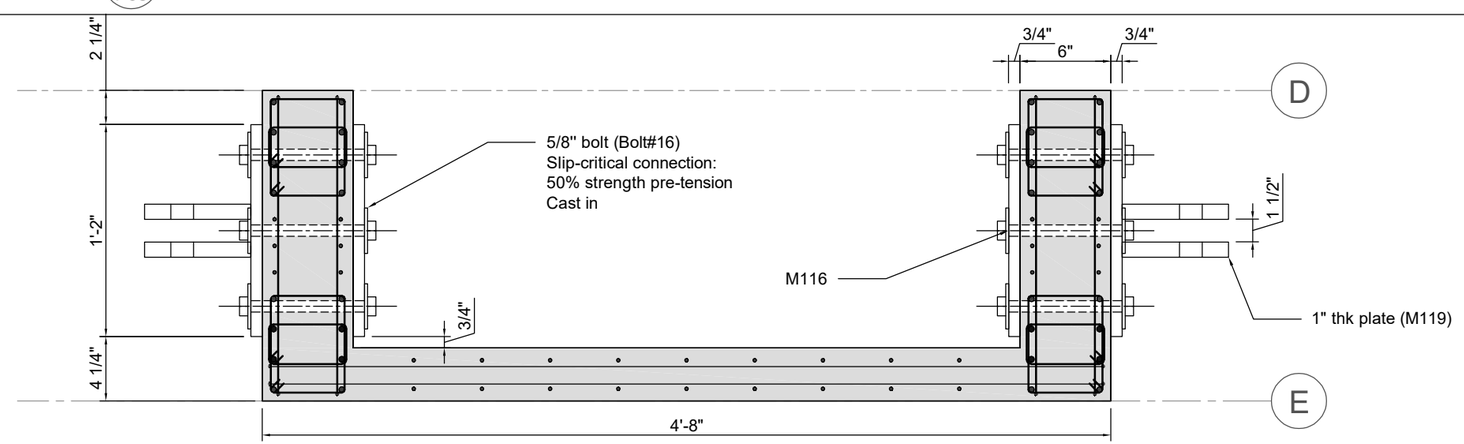

3
P08

L1

THE UNIVERSITY OF BRITISH COLUMBIA
Smart Structures

ILEE-EERF COLLABORATIVE SHAKE-TABLE TEST
NEXT-GENERATION EARTHQUAKE RESILIENT TALL BUILDING

Base Hinge Assembly

SHEET NO.
P08

DRAWN BY
Tianyang Qiao
Hengchao Xu
Lisa Tobber

DATE	2020/02/17

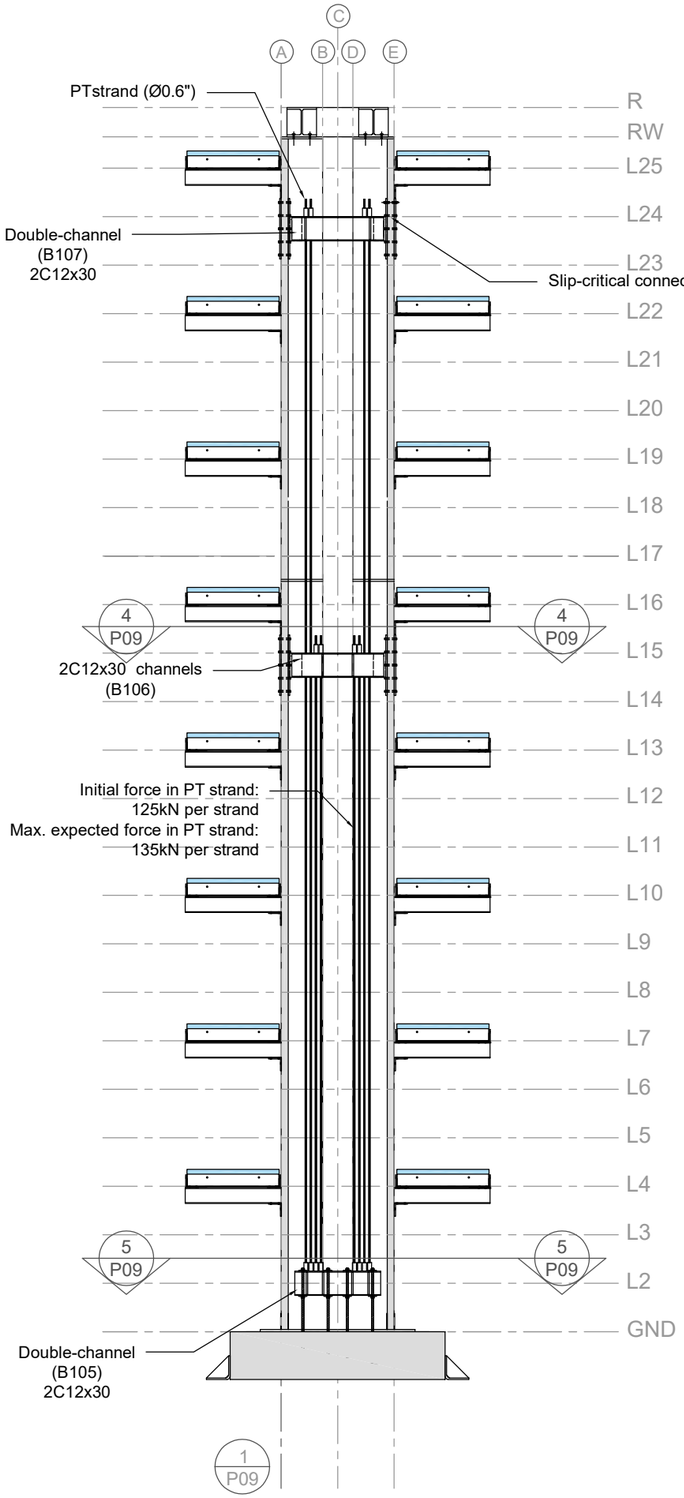

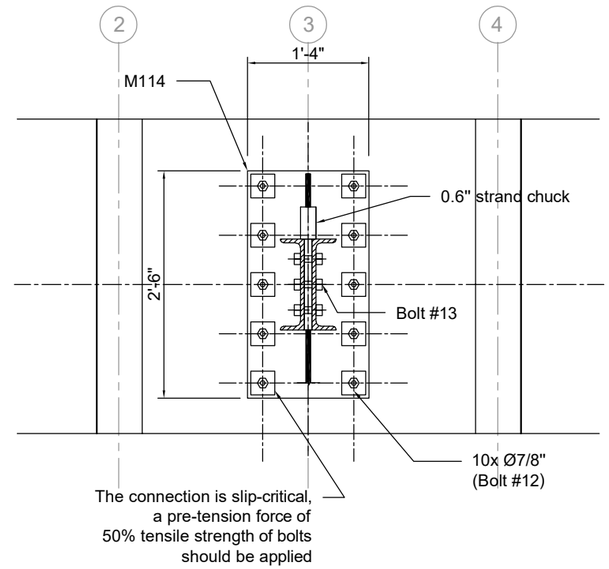

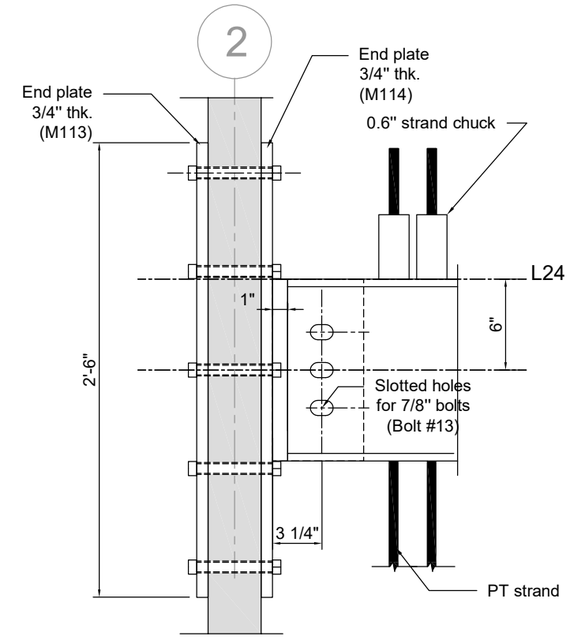

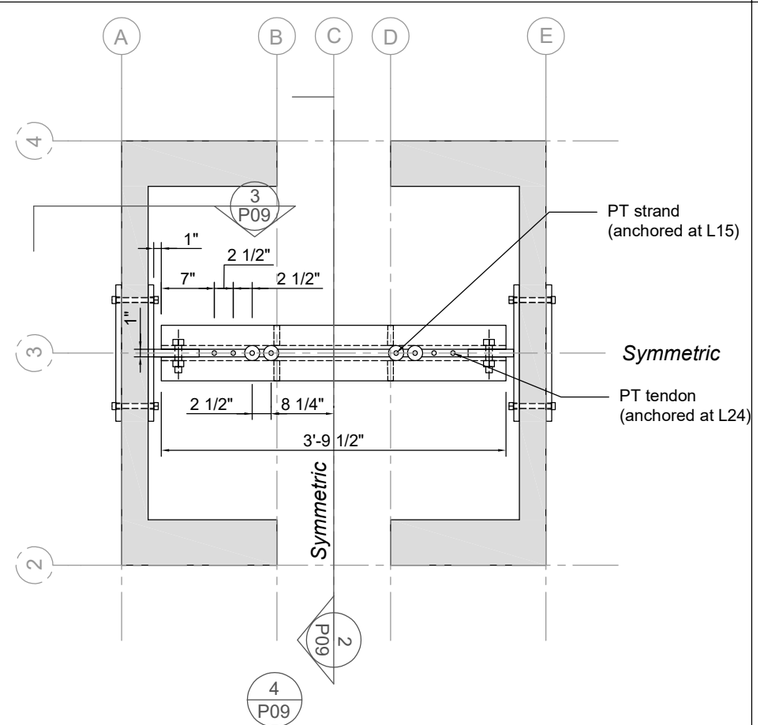

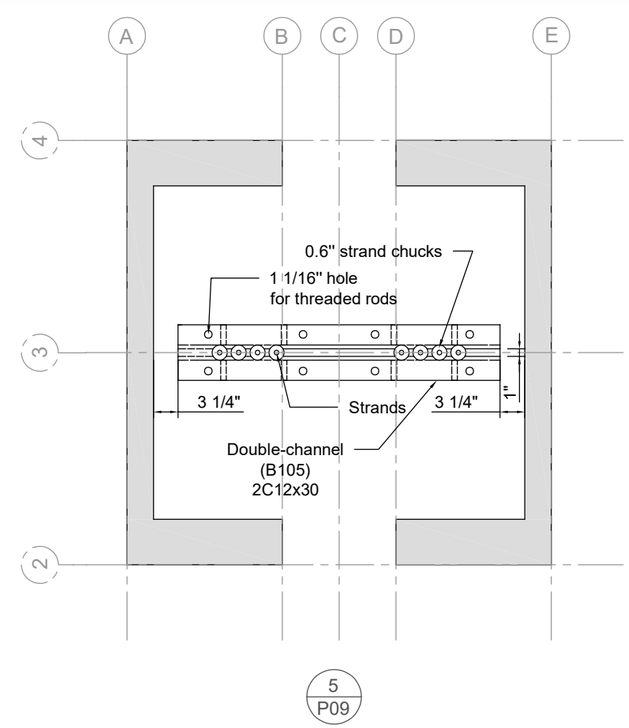

THE UNIVERSITY OF BRITISH COLUMBIA
Smart Structures

ILEE-EERF COLLABORATIVE SHAKE-TABLE TEST
NEXT-GENERATION EARTHQUAKE RESILIENT TALL BUILDING

Post-tension Assembly

SHEET NO.
P09

DRAWN BY
Tianyang Qiao
Hengchao Xu
Lisa Tobber

DATE	2020/02/17

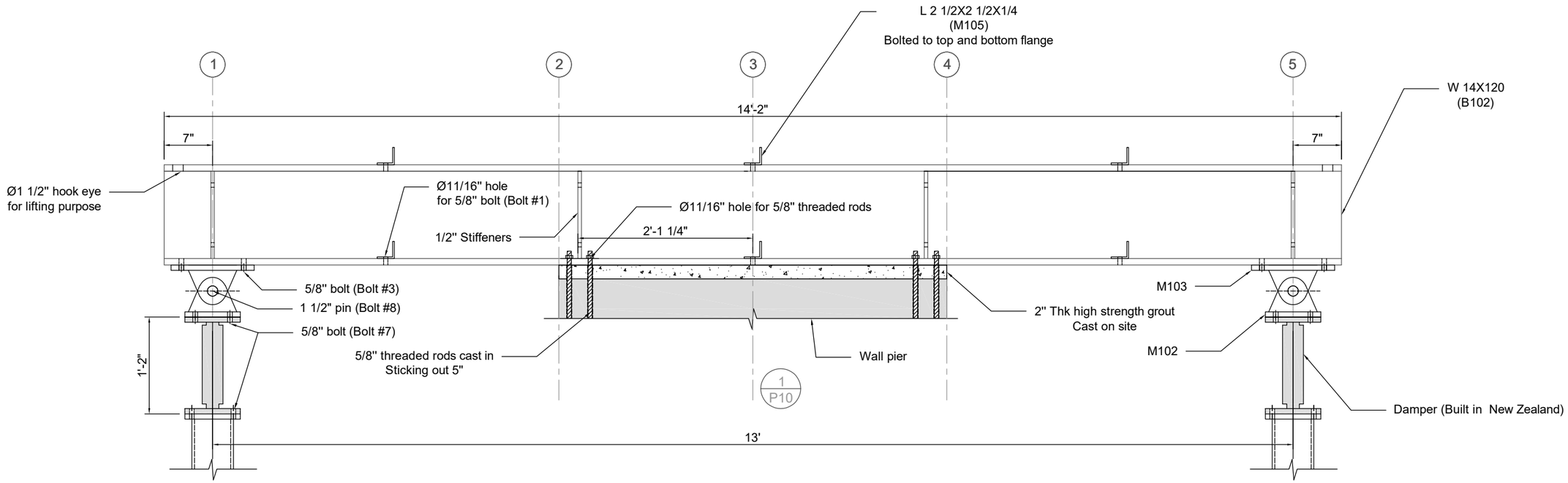

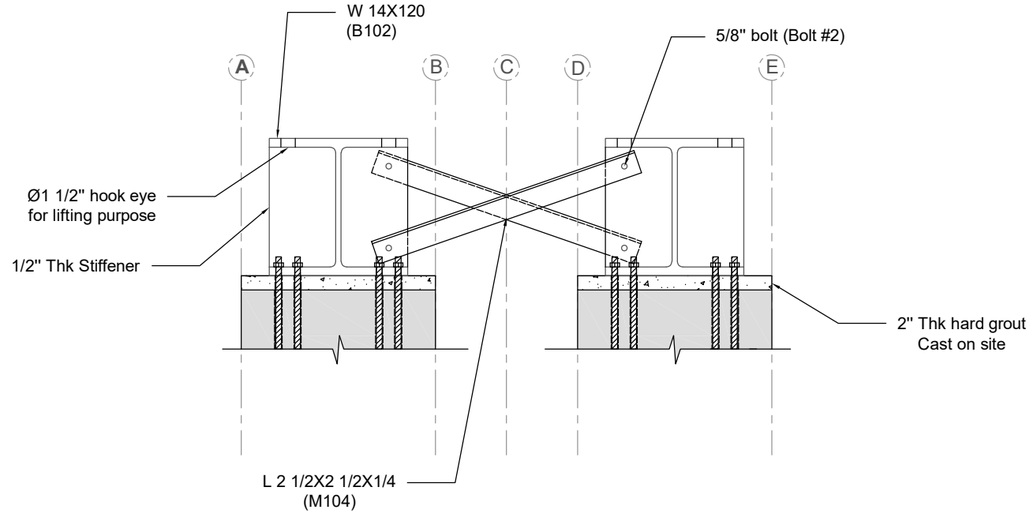

2
P10

Another six angles (L 2 1/2X2 1/2X1/4)
are also bolted to both the top and the bottom flange,
Check P6 for location of angles

THE UNIVERSITY OF BRITISH COLUMBIA
Smart Structures

ILEE-EERF COLLABORATIVE SHAKE-TABLE TEST
NEXT-GENERATION EARTHQUAKE RESILIENT TALL BUILDING

Wall Top Connection Detail

SHEET NO.

P10

DRAWN BY

Tianyang Qiao
Hengchao Xu
Lisa Tobber

DATE	2020/02/17

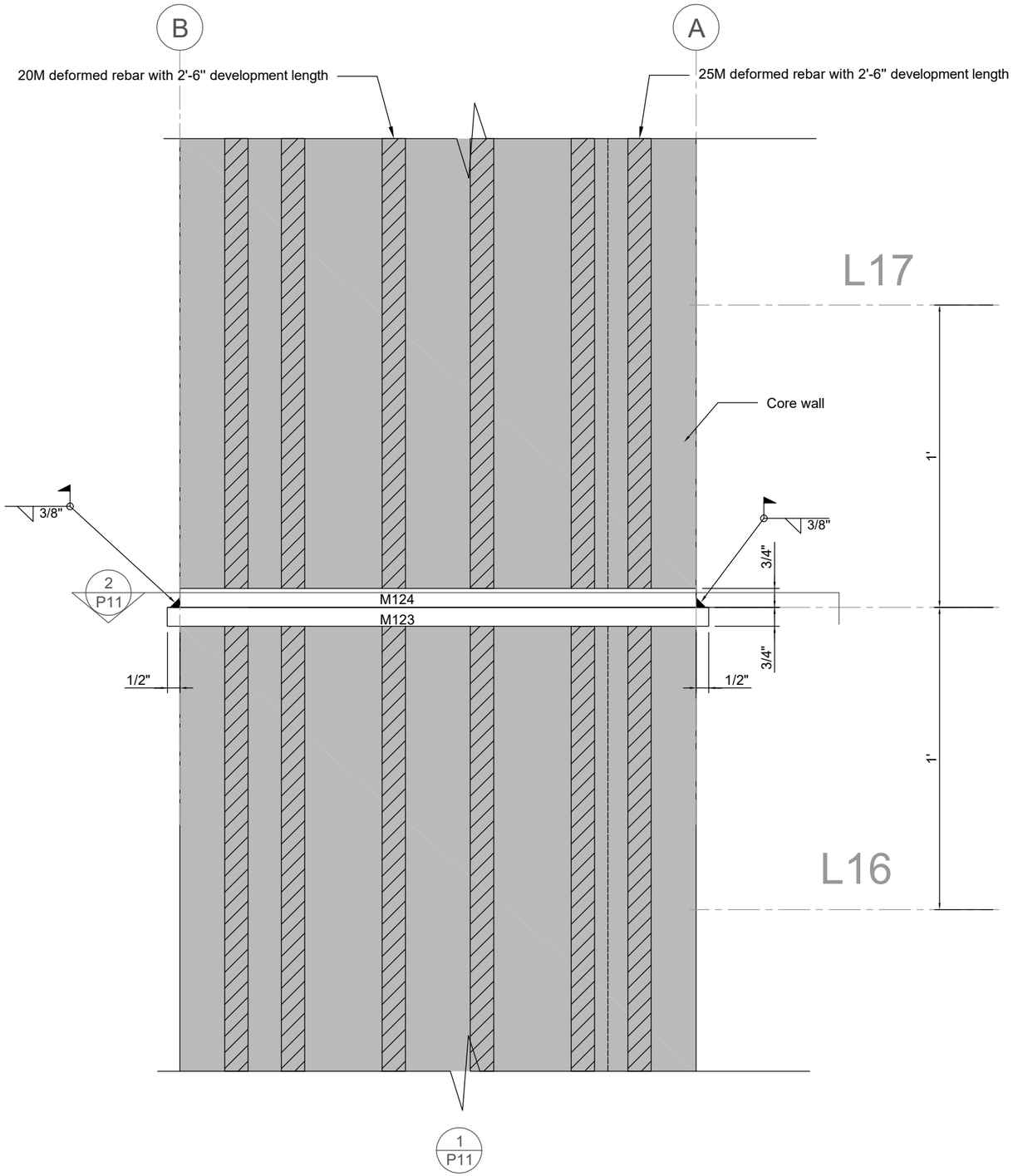

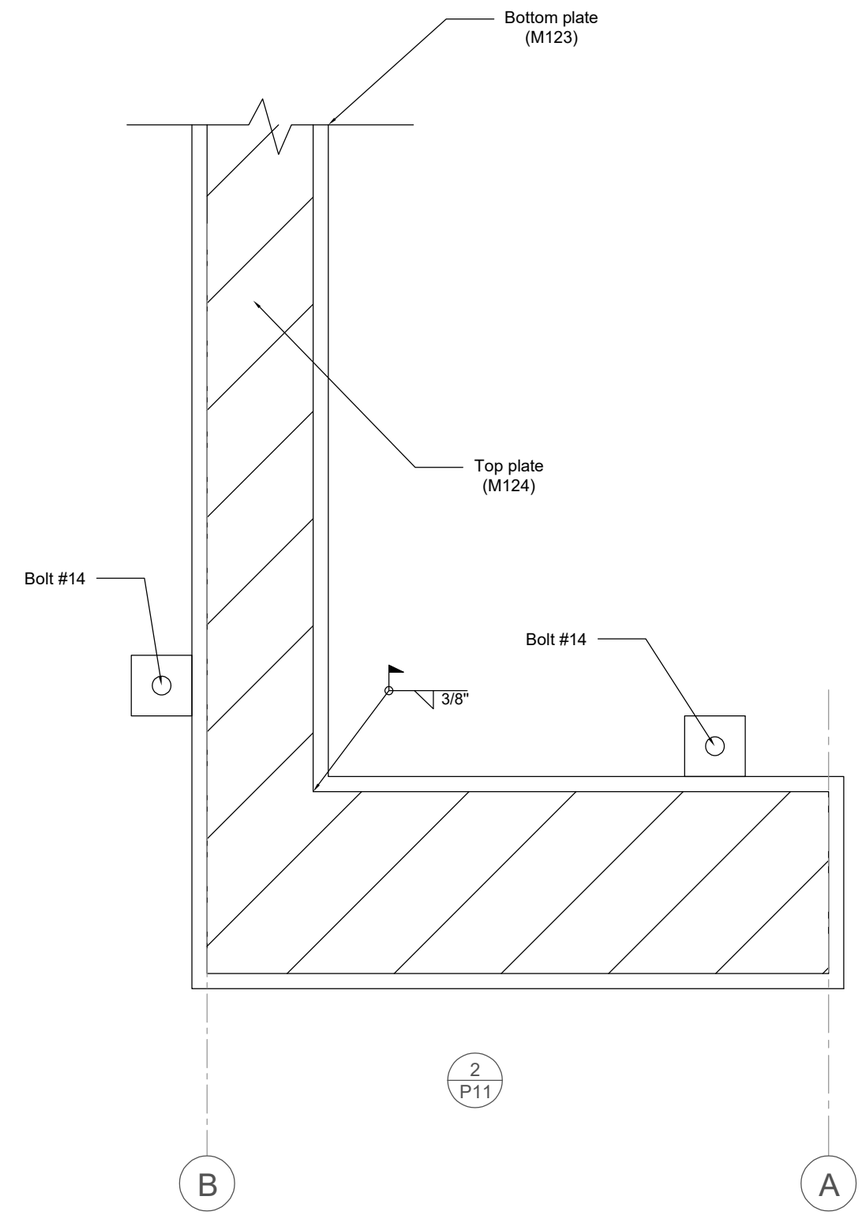

THE UNIVERSITY OF BRITISH COLUMBIA
Smart Structures

ILEE-EERF COLLABORATIVE SHAKE-TABLE TEST
NEXT-GENERATION EARTHQUAKE RESILIENT TALL BUILDING

Mid-Wall Connection Detail

SHEET NO.

P11

DRAWN BY

Tianyang Qiao
Hengchao Xu
Lisa Tobber

DATE	2020/02/17

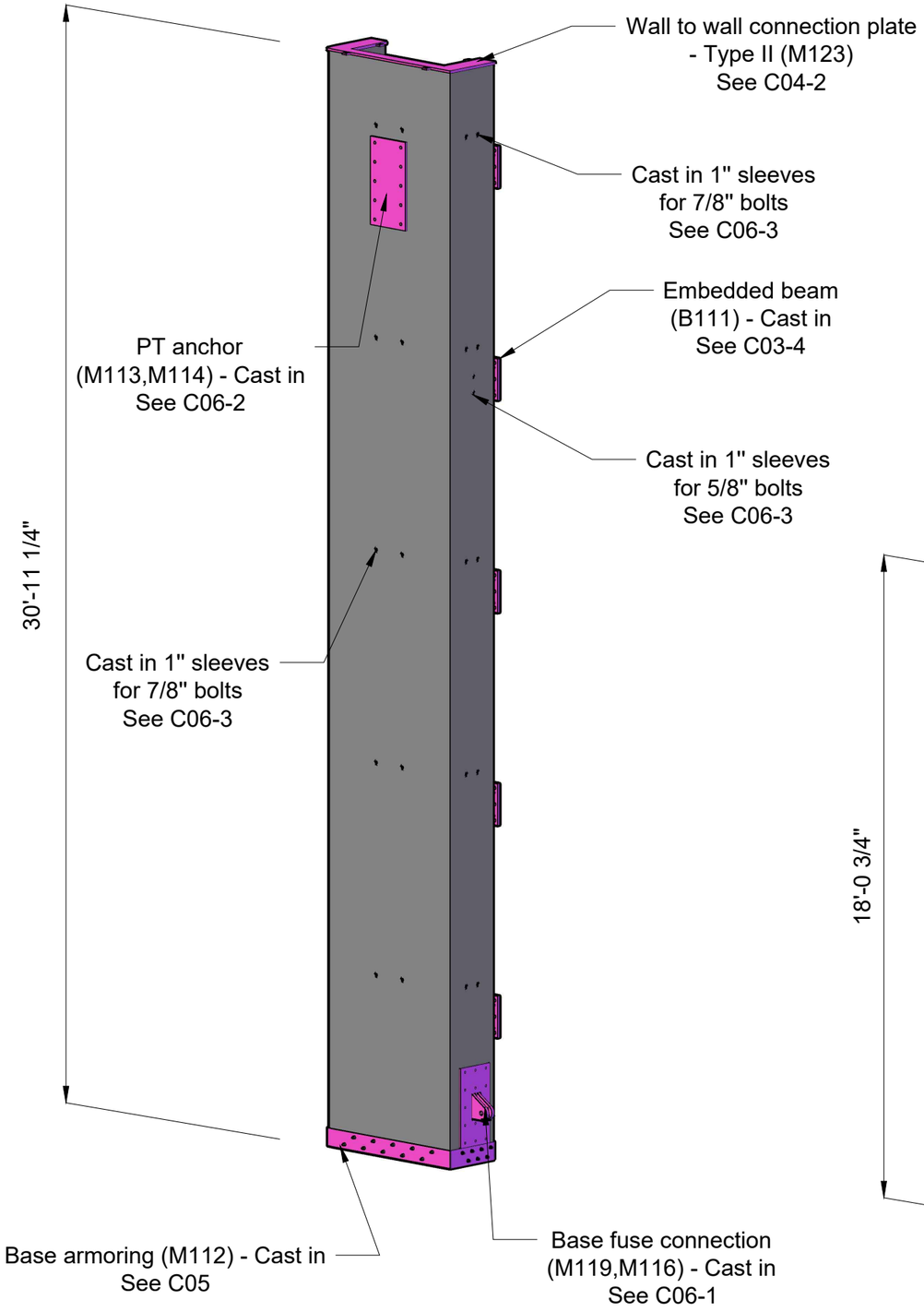

Bottom wall component
Qyt: 2
Unit Weight: 60kN/13.5kips

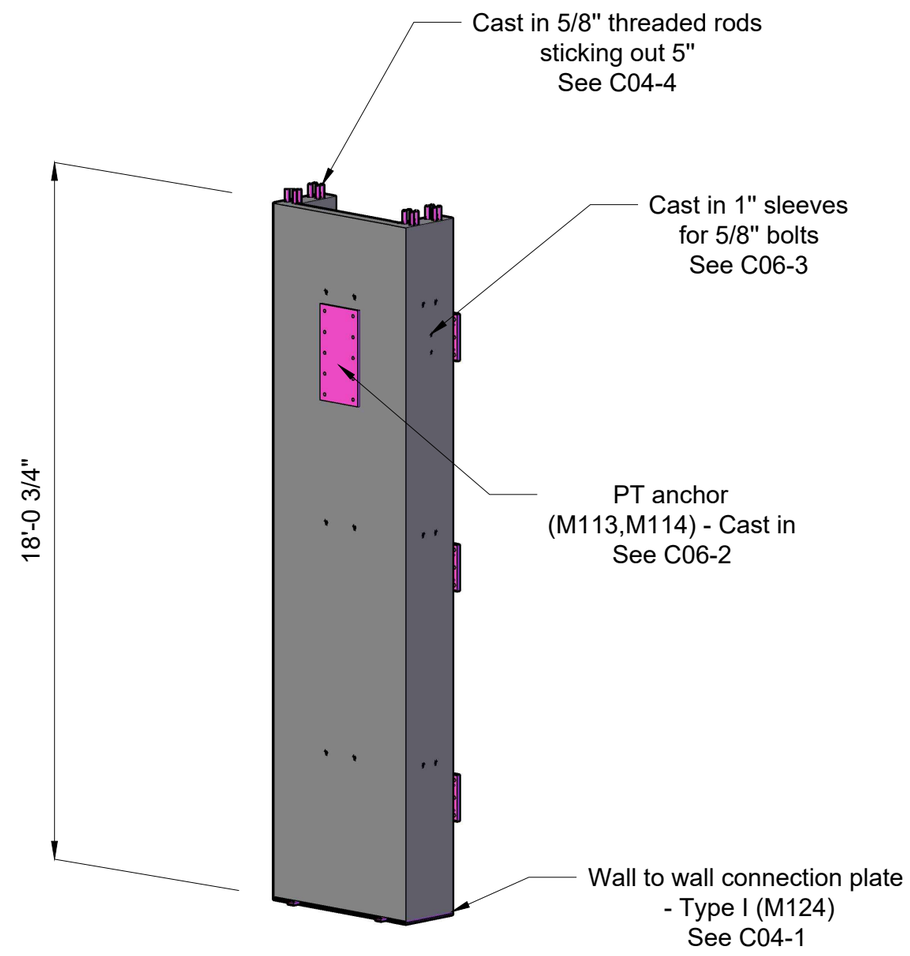

Top wall component
Qyt: 2
Unit Weight: 30kN/6.75kips

THE UNIVERSITY OF BRITISH COLUMBIA
Smart Structures

ILEE-EERF COLLABORATIVE SHAKE-TABLE TEST
NEXT-GENERATION EARTHQUAKE RESILIENT TALL BUILDING

Conceptual Drawing

SHEET NO.
Cover

DRAWN BY
Tianyang Qiao
Hengchao Xu
Lisa Tobber

DATE	2019/03/25

Rebar Information

Name	Shape	Size	Anchorage Type	Unit Length	Qty	Supplier
Vertical zone reinforcement -Top wall		#3 3/8"	/	18′	64	LMS (UBC bends all the ties, LMS bends the horizontal rebar)
Vertical zone reinforcement -Bottom wall				31′	64	
Vertical distributed reinforcement - Top wall				18′	48	
Vertical distributed reinforcement - Bottom wall				31′	48	
Horizontal distributed reinforcement at flanges			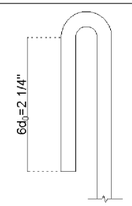	2′ − 1″	784	
Horizontal distributed reinforcement at web				5′ − 1″	392	
Ties in zone (undeformed wire) Type I	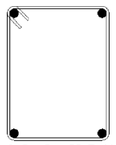 6 3/8″ X 5″	11ga Ø0.12″	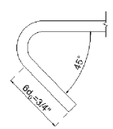	2′	1622	
Ties in zone (undeformed wire) Type II	2 3/8″ X 5″			1′ − 4″	1622	
Additional wires at flanges	4 7/8″			7 1/2″	300	
Additional wires at webs	1 3/8″			5″	430	
Threaded Dywidag bar		Ø5/8″	/	2′ − 3″	16	Dywidag

Material Summary

Type	Total length	Volume [inch3]	Weight [kg]
#3 deformed rebar	9114 ft	12073	1543
11ga undeformed wire	5773 ft	783	100
Threaded Dywidag bar	36 ft	132	17

Sleeve Information

Inner Diameter	Unit Length	Qty	Total length
Ø1″	6″	64	32 ft
Ø3/4″	6″	16	8 ft
Ø1″	3 1/2″	32	9.3 ft

Material Properties

Unless otherwise specified in the drawings, materials for all components should be:

Rebar and Wire:
#3 rebar : ASTM 706 Grade 60

11ga wire: Grade ASTM A1064

Concrete:
f 'c = 45 Mpa, from 28 day concrete cylinder tests

Clear cover is 5/16"

Max. aggregate size is 1/4"

Cast in Steel Components

M112 - Base armoring
M113, M114 - PT anchor
M116, M119 - Base fuse connection
M123 - Wall to wall connection plate Type II
M124 - Wall to wall connection plate Type I
B111 - Embedded beam

Volume of Wall Piers

7.704 m^3 (Four pieces together)

THE UNIVERSITY OF BRITISH COLUMBIA
Smart Structures

ILEE-EERF COLLABORATIVE SHAKE-TABLE TEST
NEXT-GENERATION EARTHQUAKE RESILIENT TALL BUILDING

Conceptual Drawing

SHEET NO.
Info

DRAWN BY
Tianyang Qiao
Hengchao Xu
Lisa Tobber

DATE 2019/03/25

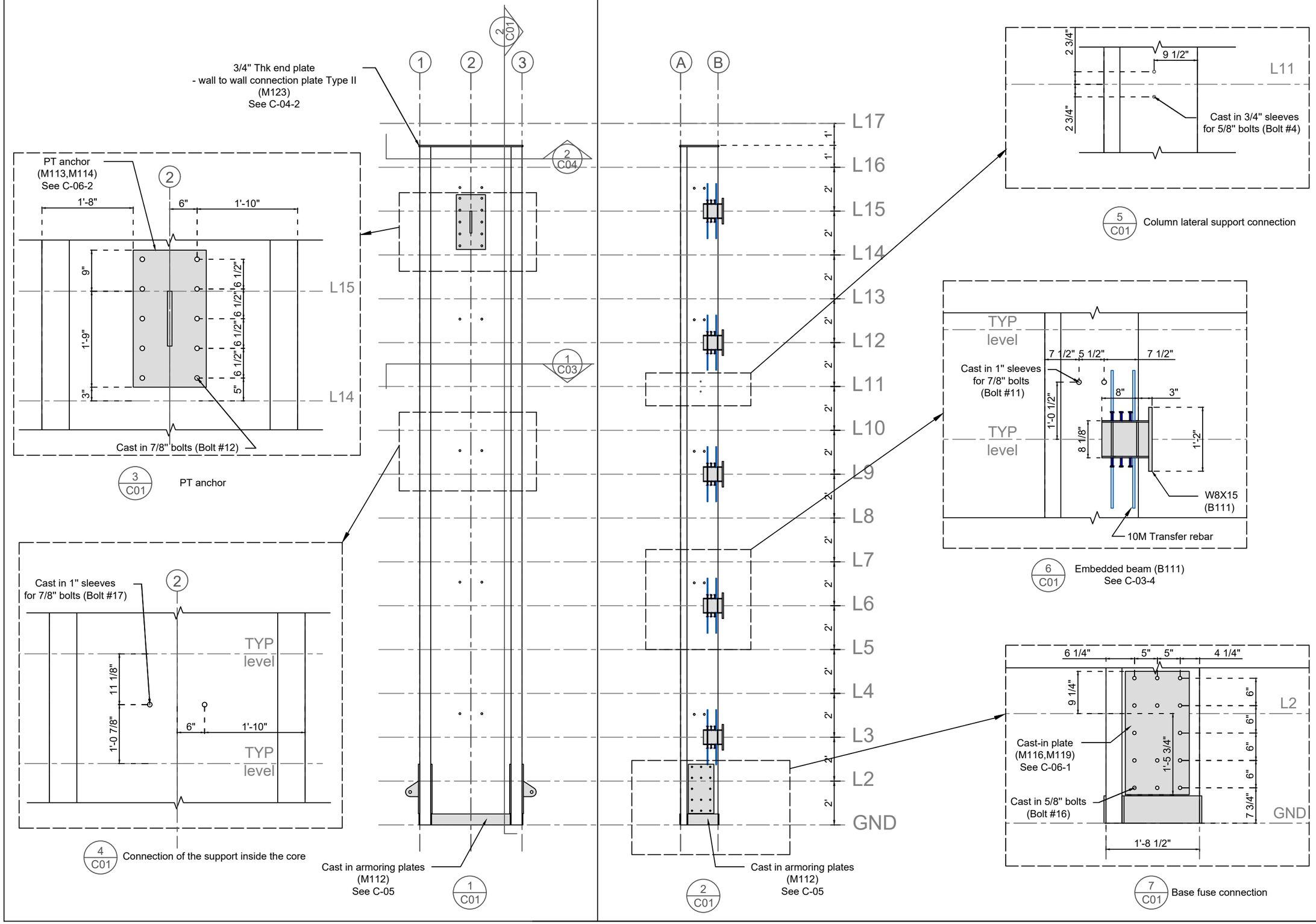

THE UNIVERSITY OF BRITISH COLUMBIA
Smart Structures

ILEE-EERF COLLABORATIVE SHAKE-TABLE TEST
NEXT-GENERATION EARTHQUAKE RESILIENT TALL BUILDING

Concrete Specimens (shake-table Test)

SHEET NO.
C01

DRAWN BY
Tianyang Qiao
Hengchao Xu
Lisa Tobber

DATE	2019/03/25

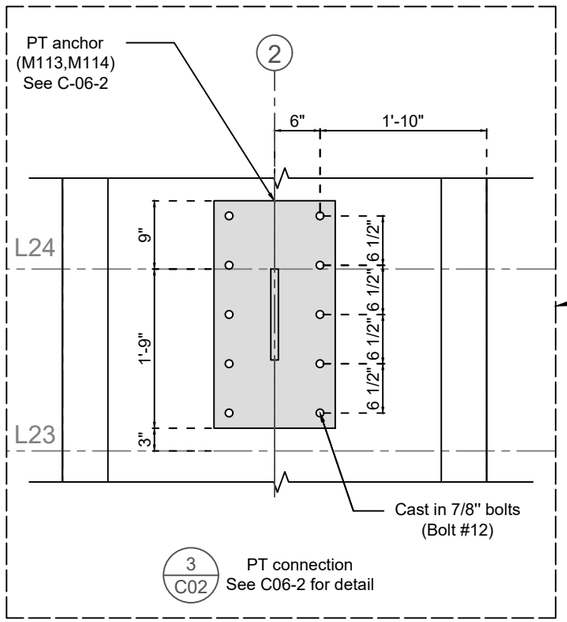

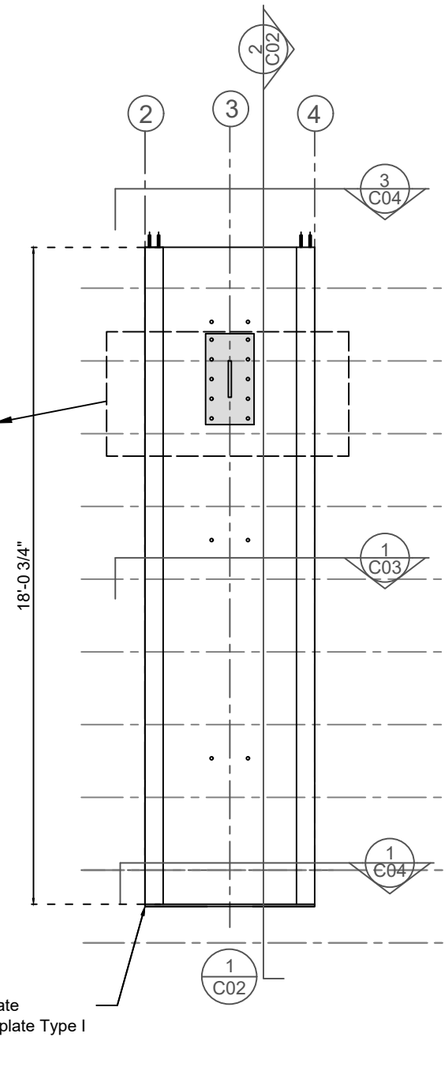

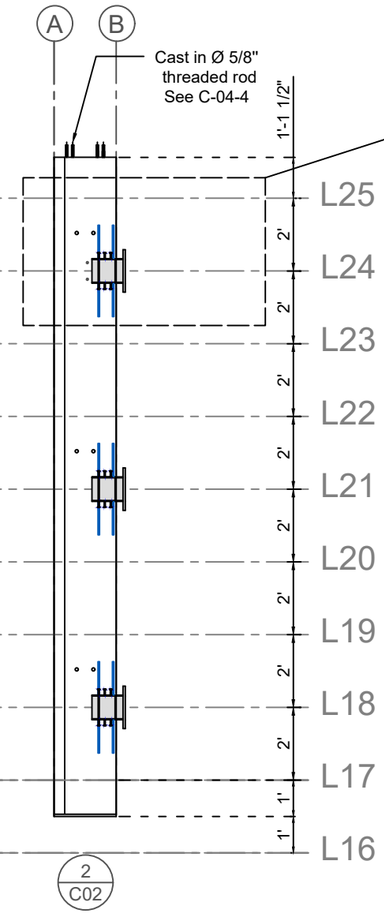

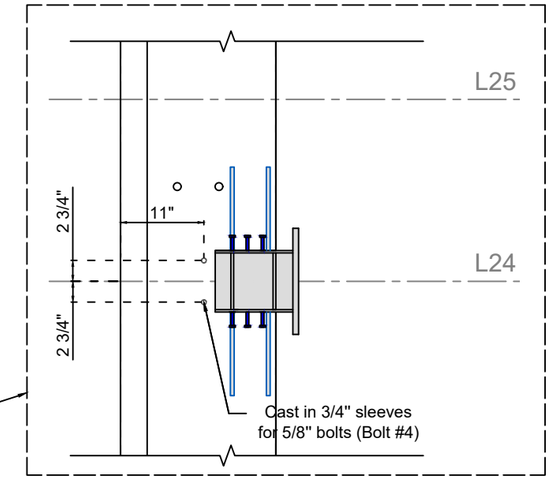

4 C02 Column lateral support connection

THE UNIVERSITY OF BRITISH COLUMBIA
Smart Structures

ILEE-EERF COLLABORATIVE SHAKE-TABLE TEST
NEXT-GENERATION EARTHQUAKE RESILIENT TALL BUILDING

Concrete Specimens (shake-table Test)

SHEET NO.
C02

DRAWN BY
Tianyang Qiao
Hengchao Xu
Lisa Tobber

DATE	2019/03/25

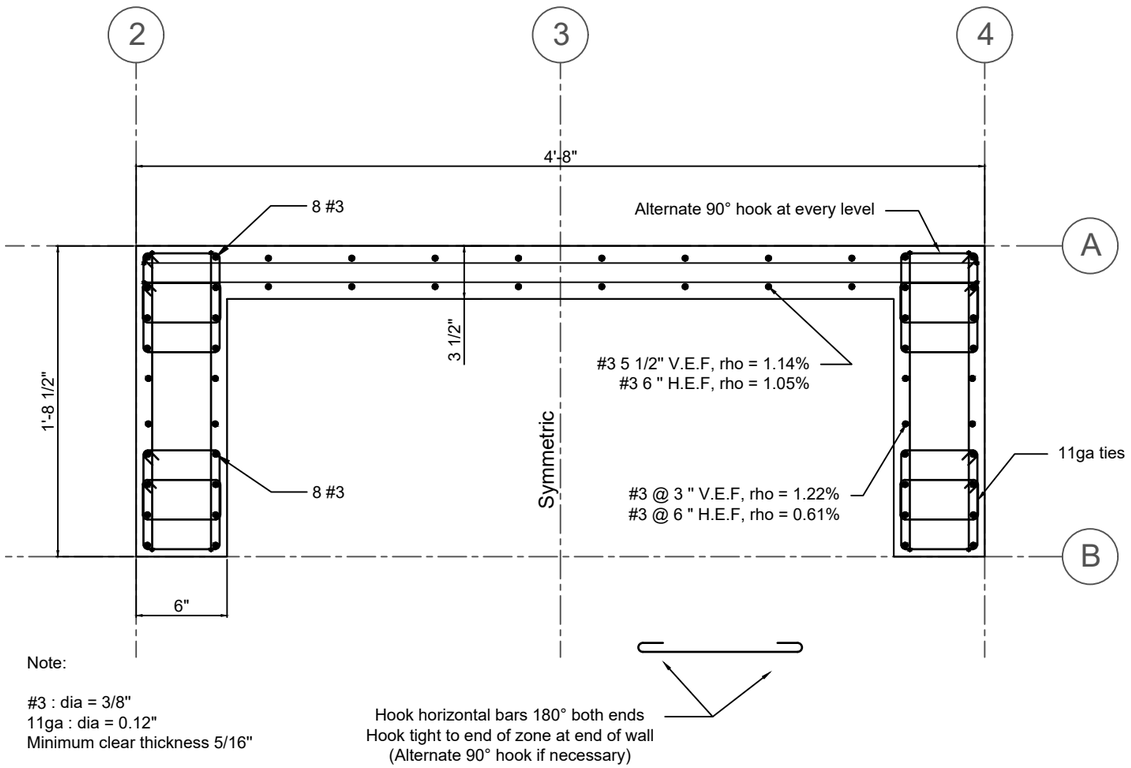

Note:

#3 : dia = 3/8"
11ga : dia = 0.12"
Minimum clear thickness 5/16"

1 / C03

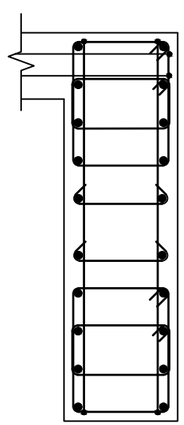

3 / C03

Additional hoops @2 1/4"
between level GND and L2

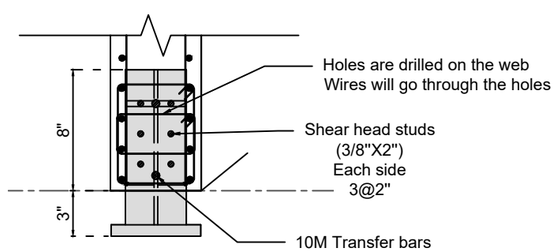

4 / C03

Special case with embed beam
(B111)

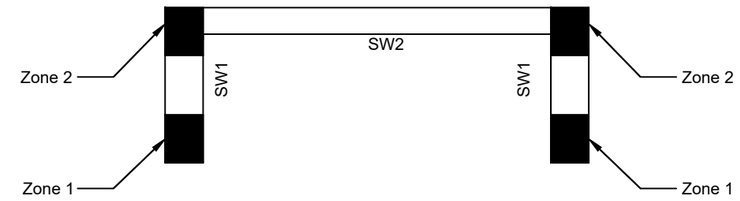

2 / C03 Location of four zones, two flanges and one web

LVL	Zone reinforcing		Distribution steel		f'c
	Z1	Z2	SW1 (flange)	SW2 (web)	
Roof					
L24					
L23					
L22					
L21		8-#3 vert 11ga ties@2 1/4"			
L20					
L19					
L18					
L17					
L16					
L15					
L14					
L13					
L12					45MPa
L11					
L10					
L9					
L8					
L7					
L6					
L5		8-#3 vert 11ga ties@6"			
L4					
L3					
L2					
L1	8-#3 vert 11ga ties@2 1/4"	8-#3 vert 11ga ties@2 1/4"	6in wall #3 @ 3" VEF #3 @ 6" HEF	3.5in wall #3 @ 5 1/2" VEF #3 @ 6" HEF	

5 / C03 Detailed information of reinforcement in elevation

THE UNIVERSITY OF BRITISH COLUMBIA
Smart Structures

ILEE-EERF COLLABORATIVE SHAKE-TABLE TEST
NEXT-GENERATION EARTHQUAKE RESILIENT TALL BUILDING

Concrete Specimens (shake-table Test)

SHEET NO.
C03

DRAWN BY
Tianyang Qiao
Hengchao Xu
Lisa Tobber

DATE	2019/03/25

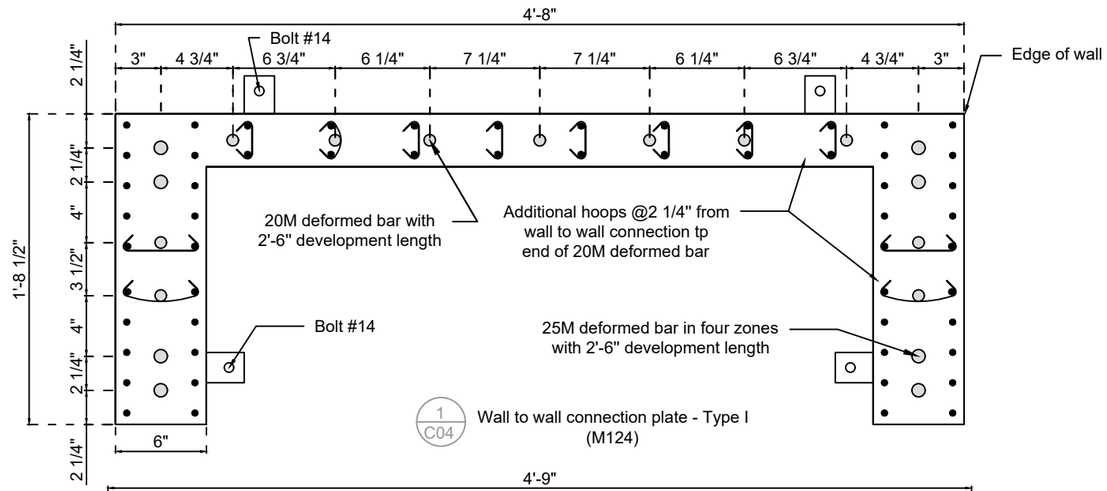

1 C04 Wall to wall connection plate - Type I (M124)

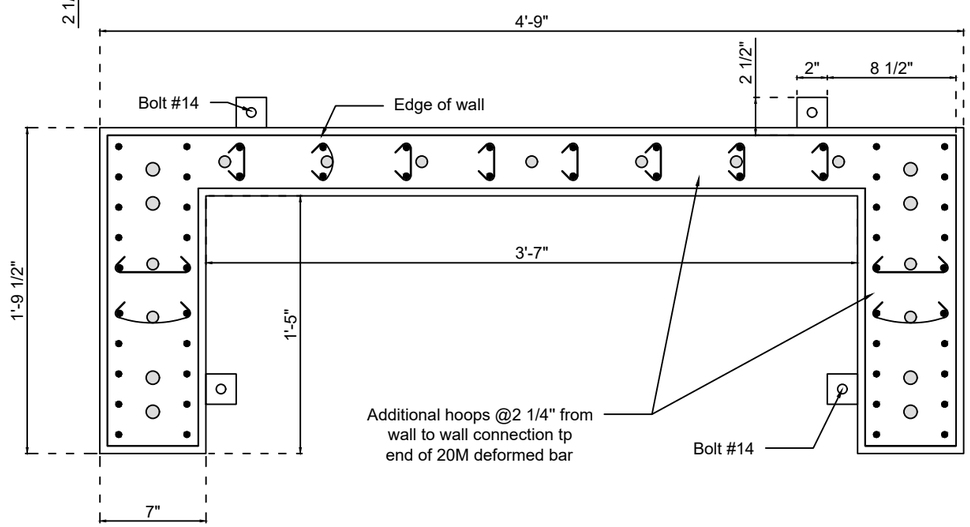

2 C04 Wall to wall connection plate - Type II (M123)

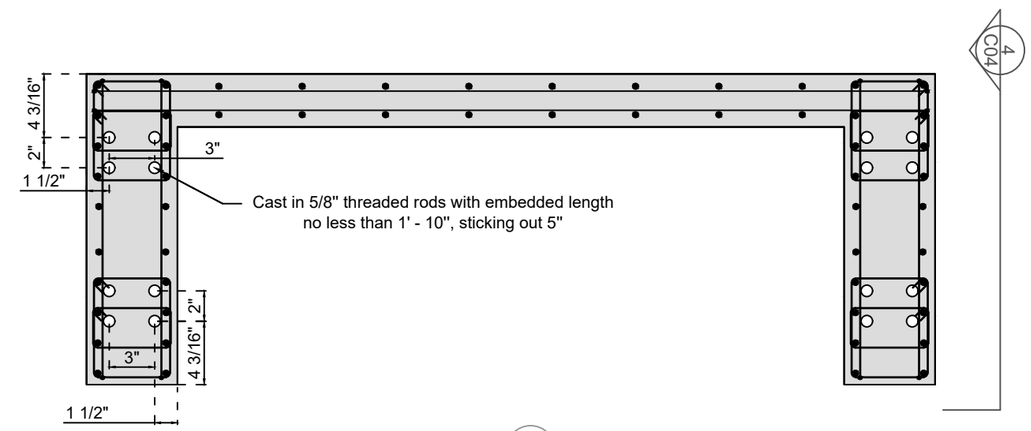

3 C04

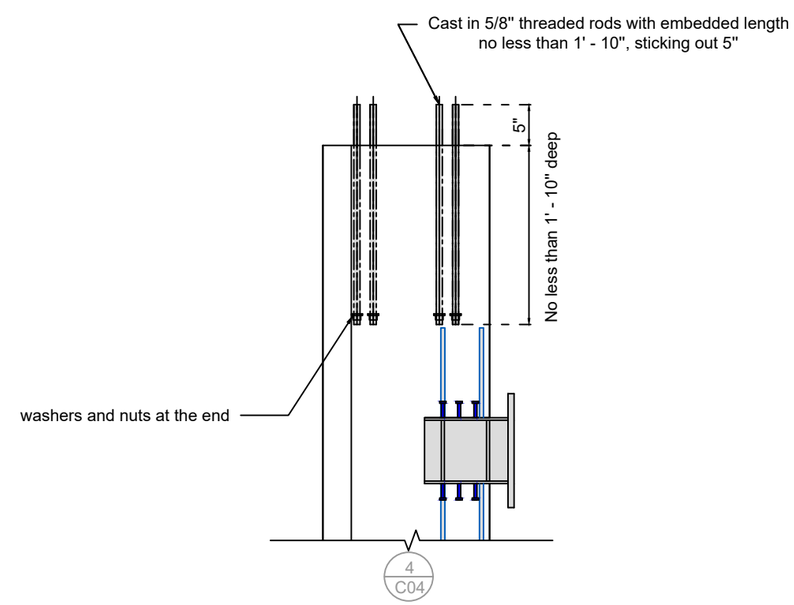

4 C04

THE UNIVERSITY OF BRITISH COLUMBIA
Smart Structures

ILEE-EERF COLLABORATIVE SHAKE-TABLE TEST
NEXT-GENERATION EARTHQUAKE RESILIENT TALL BUILDING

Concrete Specimens (shake-table Test)

SHEET NO.
C04

DRAWN BY
Tianyang Qiao
Hengchao Xu
Lisa Tobber

DATE	2019/03/25

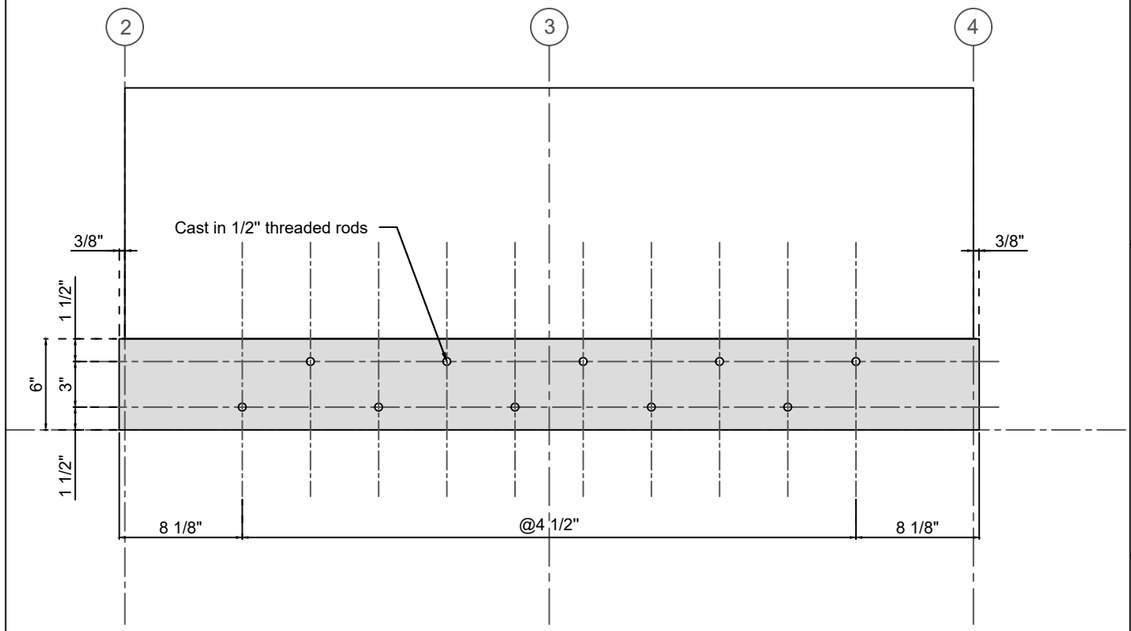

1
C05

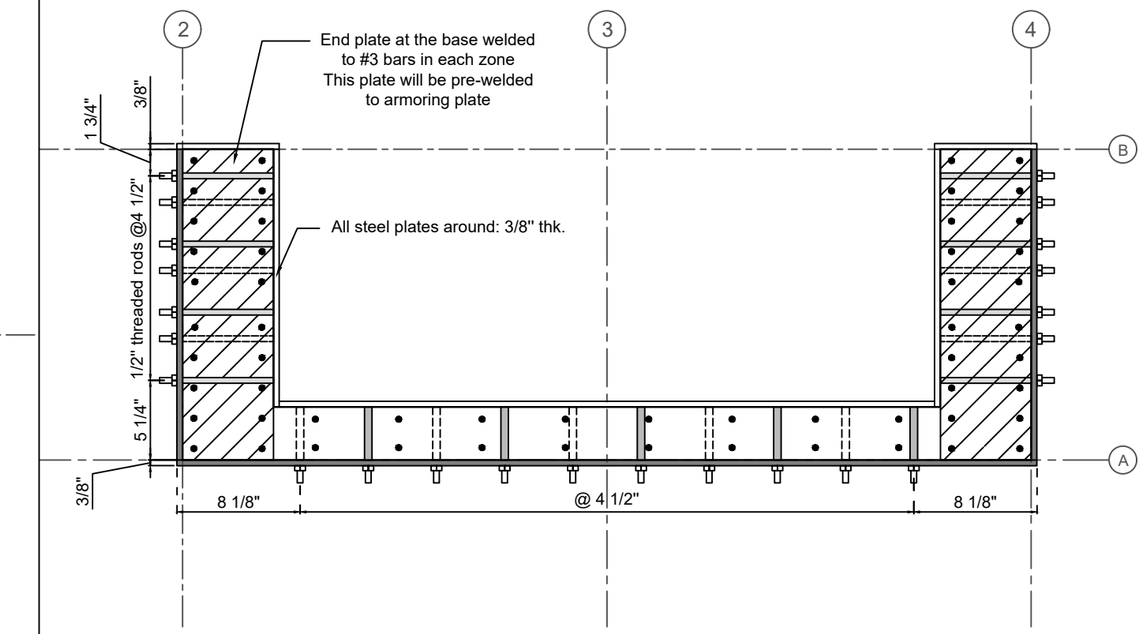

3
C05

Base armoring detail
for frame work - M112

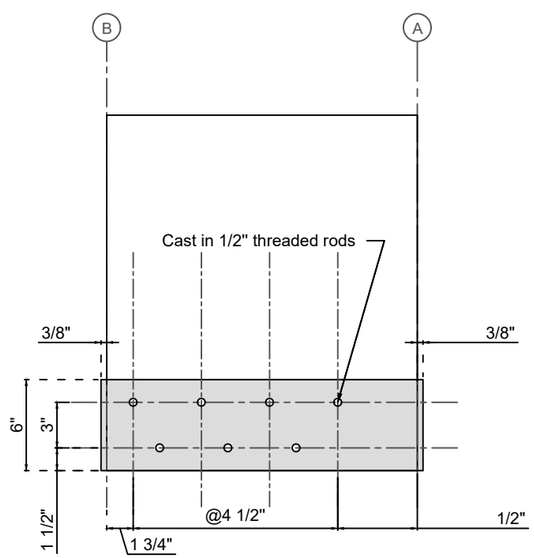

2
C05

THE UNIVERSITY
OF BRITISH COLUMBIA
Smart Structures

ILEE-EERF COLLABORATIVE SHAKE-TABLE TEST
NEXT-GENERATION EARTHQUAKE RESILIENT TALL BUILDING

Concrete Specimens (shake-table Test)

SHEET NO.

C05

DRAWN BY

Tianyang Qiao
Hengchao Xu
Lisa Tobber

DATE	2019/03/25

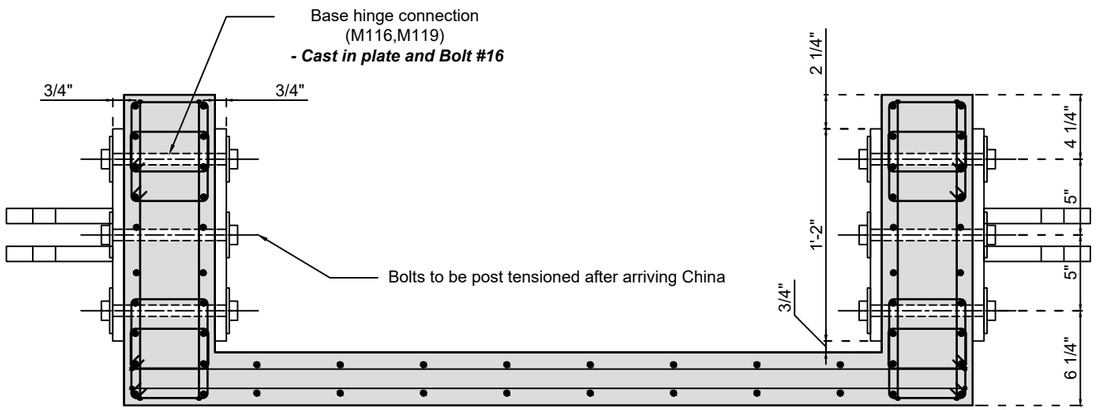

1 / C06 Base fuse assembly

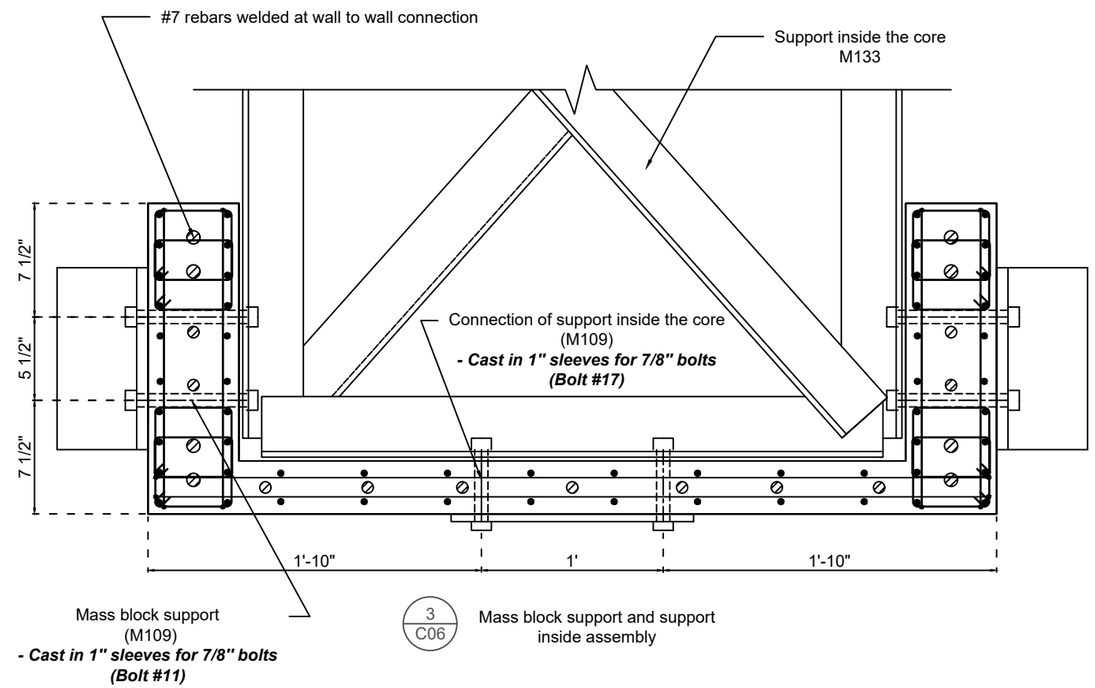

3 / C06 Mass block support and support inside assembly

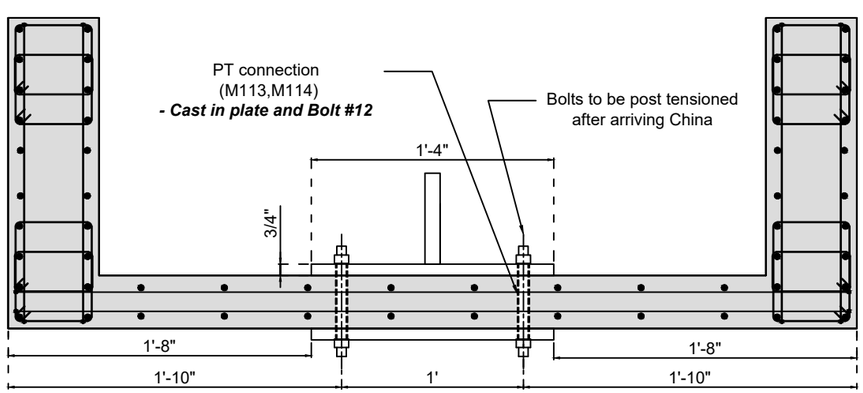

2 / C06 PT anchor

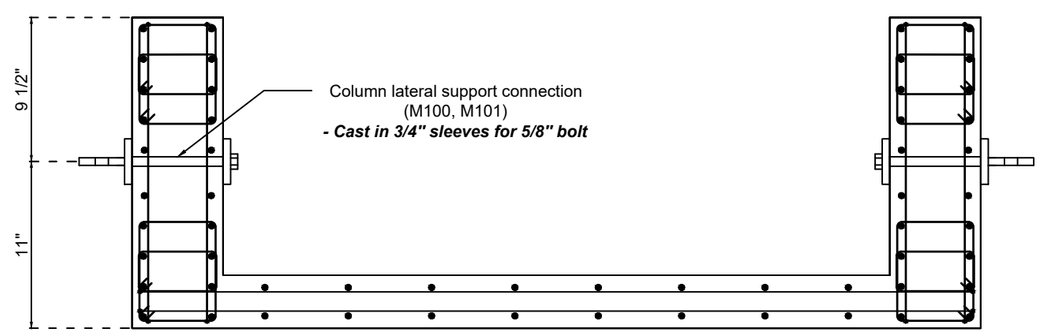

4 / C06 Column lateral support assembly

THE UNIVERSITY OF BRITISH COLUMBIA
Smart Structures

ILEE-EERF COLLABORATIVE SHAKE-TABLE TEST
NEXT-GENERATION EARTHQUAKE RESILIENT TALL BUILDING

Concrete Specimens (shake-table Test)

SHEET NO.
C06

DRAWN BY
Tianyang Qiao
Hengchao Xu
Lisa Tobber

DATE	2019/03/25